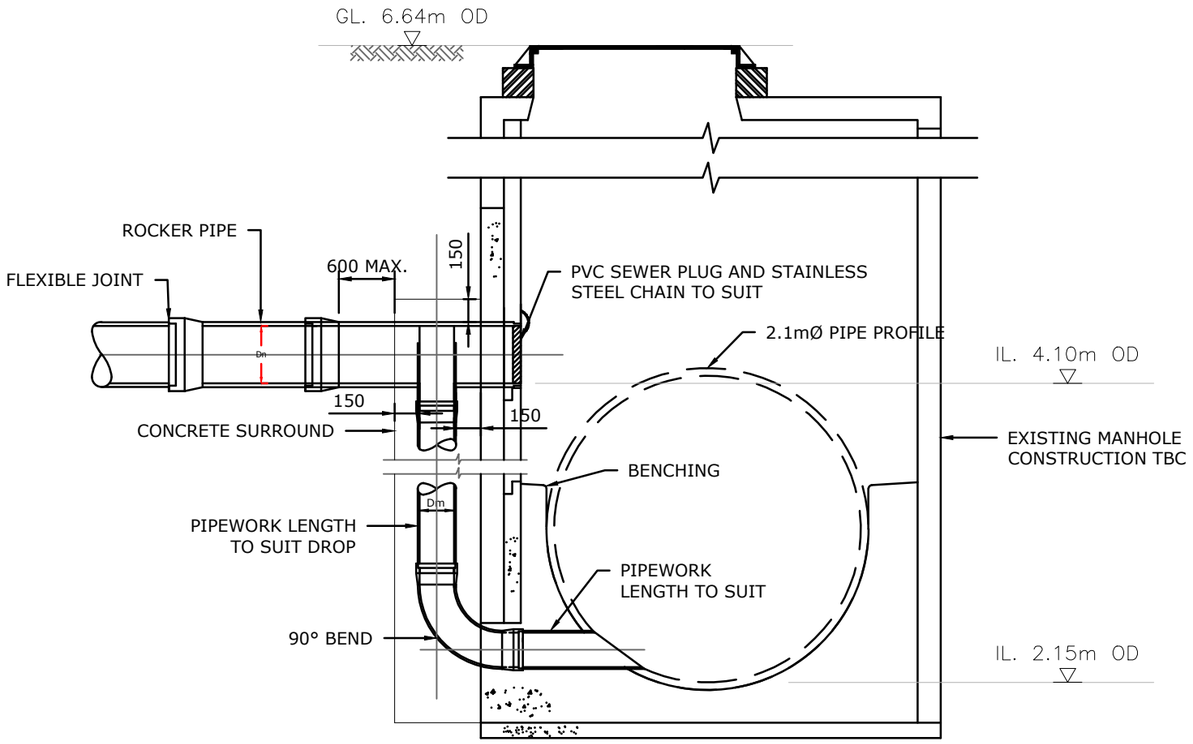

SECTION - BACKDROP CONNECTION

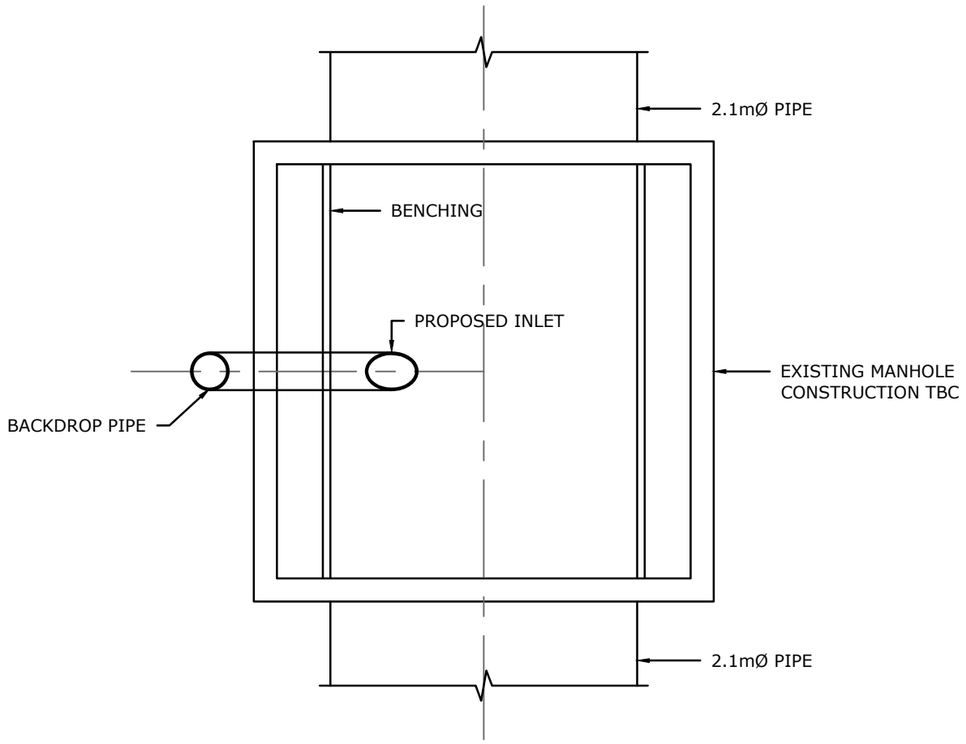

PLAN - BACKDROP CONNECTION

	REVISION DETAILS	DATE

THIS DRAWING AND ANY DESIGN HEREON IS THE COPYRIGHT OF THE CONSULTANTS AND MUST NOT BE REPRODUCED WITHOUT THEIR WRITTEN CONSENT.

ALL DRAWINGS REMAIN THE PROPERTY OF THE CONSULTANTS. ALL DIMENSIONS TO BE VERIFIED AND CHECKED ON SITE. CONSULTANTS TO BE INFORMED OF ANY DISCREPANCIES BEFORE WORK PROCEEDS.

	CONCRETE GRADE	COVER
EXPOSURE CONDITIONS		
MILD DRY ENCLOSED	30N/mm^2	25mm
FOUNDATIONS DAMP	35N/mm^2	30mm
SEVERE EXPOSED	40N/mm^2	40mm
	CEMENT CONTENT	MAX. FREE WATER CEMENT RATIO
EXPOSURE CONDITIONS		
MILD DRY ENCLOSED	275kg/m^3	0.65
FOUNDATIONS DAMP	300kg/m^3	0.60
SEVERE EXPOSED	325kg/m^3	0.55

MAX. SIZE OF AGGREGATE TO BE 20mm.

Issue:
INFORMATION

Project.
HOUSING DEVELOPMENT
RAHEEN, LIMERICK

Client.
DW RAHEEN DEVELOPMENT LTD.

Drawing Title.
TYPICAL MANHOLE DETAIL
BACKDROP MANHOLE

Drawn.	Scale.	Checked.	Date.
DOM	1:40	DF	02.07.08

HUTCH O'MALLEY
CONSULTING ENGINEERS

Hutch O' Malley Consulting Engineers
The Railway Station, Attyflin, Patrickswell, Co.Limerick
Phone: 061-320260 E-Mail: michelle@hutchomalley.ie
www.hutchomalley.ie

Project No.	Drawing No.	Revision
18112	C59	X